IMF69

setting the standard in mud flaps®

2021+ Hyundai Elantra Mud Flap Installation Instructions

View instructions and photos online www.rallyarmor.com

CARE AFTER INSTALLATION Once installed, the vehicle owner is responsible for the condition of the mud flaps and all costs associated with replacing damaged or lost parts. Warranty covers manufacturer defect on new, never installed parts.

☢ Watch for blind spots when parking ☢ Avoid contact with curbs, bumps and objects that can compress the flaps with excessive force. Be sure to check wheel clearances, especially on vehicles equipped with aftermarket wheels and suspensions.

QUESTION ON INSTALLATION? CONTACT US ONLINE **www.rallyarmor.com/support**

NEED TO PURCHASE REPLACEMENT PARTS? SEND RECEIPT OR PHOTO OF RALLY ARMOR LOGO ON FLAPS TO US **www.rallyarmor.com/support**

IMPORTANT NOTES







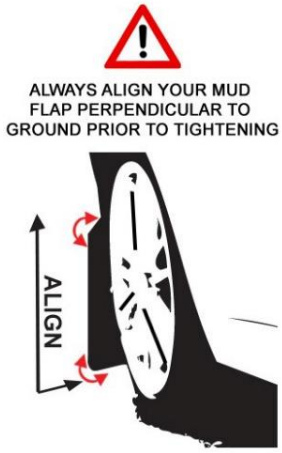

INSTALLATION KIT CONTENTS

QUANTITY	PART	ITEM ID
2	LOCK NUT	SSLNUT
10	SCREW	1SS
2	LONG SCREW	2.5SS
14	SMALL WASHER	SMWASH
2	INSERT	INS5
2	PLASTIC SPACER	1.5SP
2	FRONT MOUNTING BRACKET	BMF63
1 1	MOUNTING BRACKET LEFT REAR MOUNTING BRACKET RIGHT REAR	BMF57-LR BMF57-RR

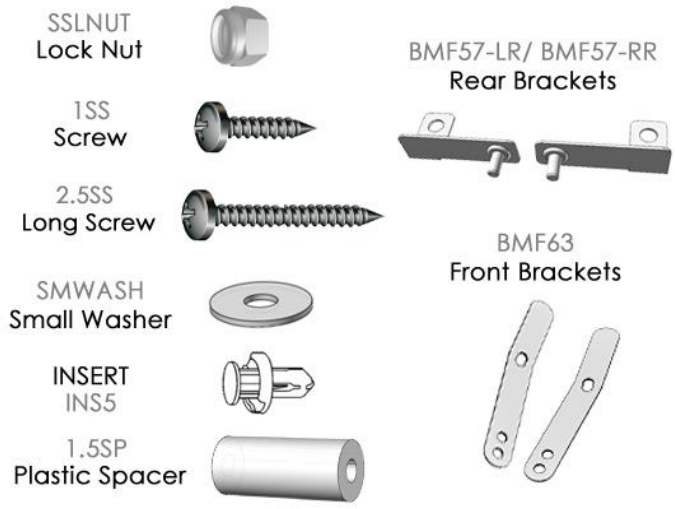

Recommended Tools offset or ratcheting screw driver, 7/16th" Wrench.

Important Tips Installation should be done on an even surface. Do not use power tools to tighten hardware. Hand tools only. Avoid overtightening.

RALLY ARMOR - A BIT ABOUT OUR STANDARD IN MUD FLAPS

Rally Armor mud flaps are fabricated from a high grade polyurethane plastic that is rigorously reviewed for quality and consistency. As with all manufacturing processes, controlled conditions and multiple QC checkpoints minimize major irregularities, however certain very minor surface layer marks appear periodically. These are visual variations that do not affect construction nor do they impede the performance of the flaps. Most matte away as the material ages naturally with continued exposure to the outdoors. Each flap is unique in appearance yet all are equally structurally sound.

RALLYARMOR®
setting the standard in mud flaps®

2021+ Hyundai Elantra Mud Flap Installation Instructions

FRONT MUD FLAP

Hardware & Bracket 1 x Front Flap → 1 x BMF63; 2 x 1SS; 1 x 2.5SS; 3 x SMWASH; 1 x 1.5SP

Turn the steering wheel towards the side you are working on to gain access to the inner wheel well area.

FIGURE A Remove fender liner fasteners 1, 2, and 3.

FIGURE B Place mud flap logo-side facing the rear of the vehicle against corresponding mounting points of BMF63 Bracket and fender. Install 1SS Screws & SMWASH Washers through BMF63 BRACKET in mounting points 1 and 2. For mounting point 3, place 1.5SP Plastic spacer behind the mud flap. Fasten with 2.5SS Screw & SMWASH Washer tightening only until seated. Do not overtighten.

FIGURE C View the rear of the vehicle to ensure the flaps are aligned. Make slight adjustments before tightening all mounting screws.

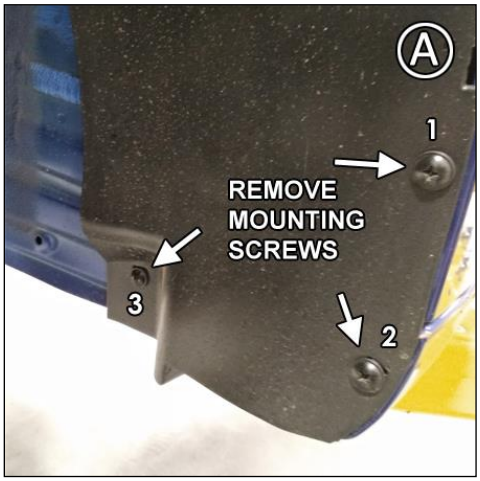

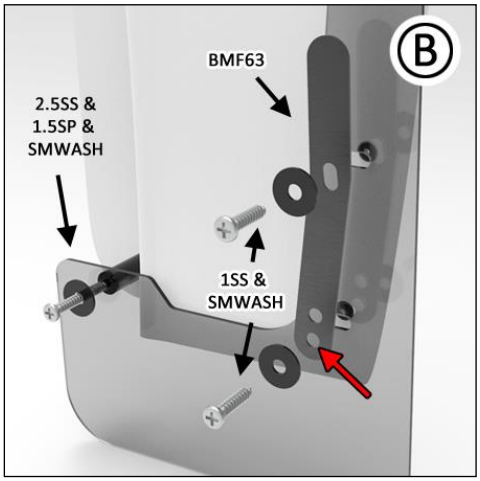

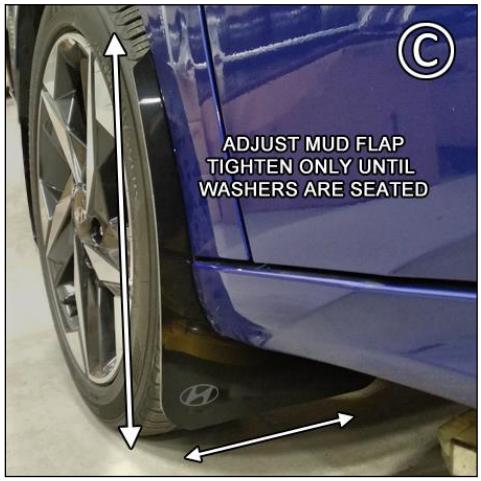

REAR MUD FLAP

Hardware & Bracket for 1 x Rear Flap → 1 x BMF57-LR/RR; 1 x SSLNUT; 1 x 1MCHSS; 3 x 1SS; 1 X IN5; 4 x SMWASH

FIGURES D/E Remove all wheel liner screw fasteners 1,2, and 3. Remove lower liner retainer.

FIGURE F Install BMF57-LR/RR Rear bracket using INS5 insert.



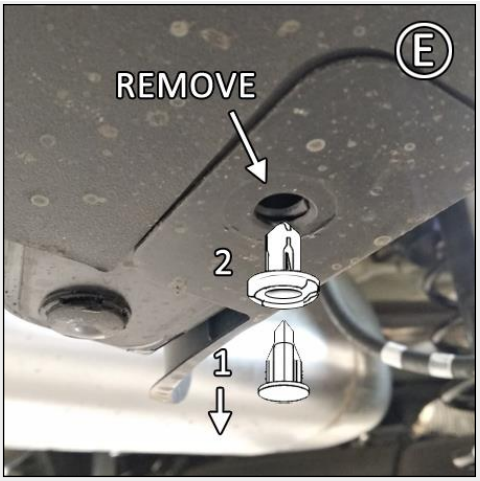

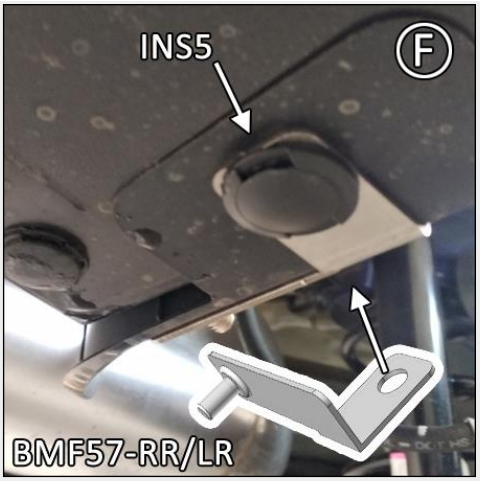

FIGURE G Ensure BMF57-RR/LR stud is facing forward.

FIGURE H Install 1SS Screw using SMWASH Washer into mud flap through points 1, 2 ,and 3. Secure mounting point 4 with SSLNUT Lock nut and SMWASH Washer. Tighten only until mud flap is level with bumper. Do not overtighten.

FIGURE I Align outer edge of the flap by adjusting until the flap is perpendicular to even ground. Hand tighten until washers are seated.

Version 1.0 Release Date Nov-17- 2020

RALLYARMOR®
setting **the** standard in mud flaps®

2021+ Hyundai Elantra Mud Flap Installation Instructions



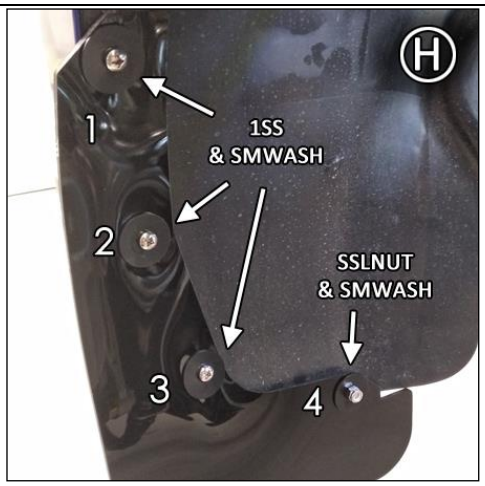



FRONT RALLYARMOR® REAR

MF69 MOUNTING DIAGRAM

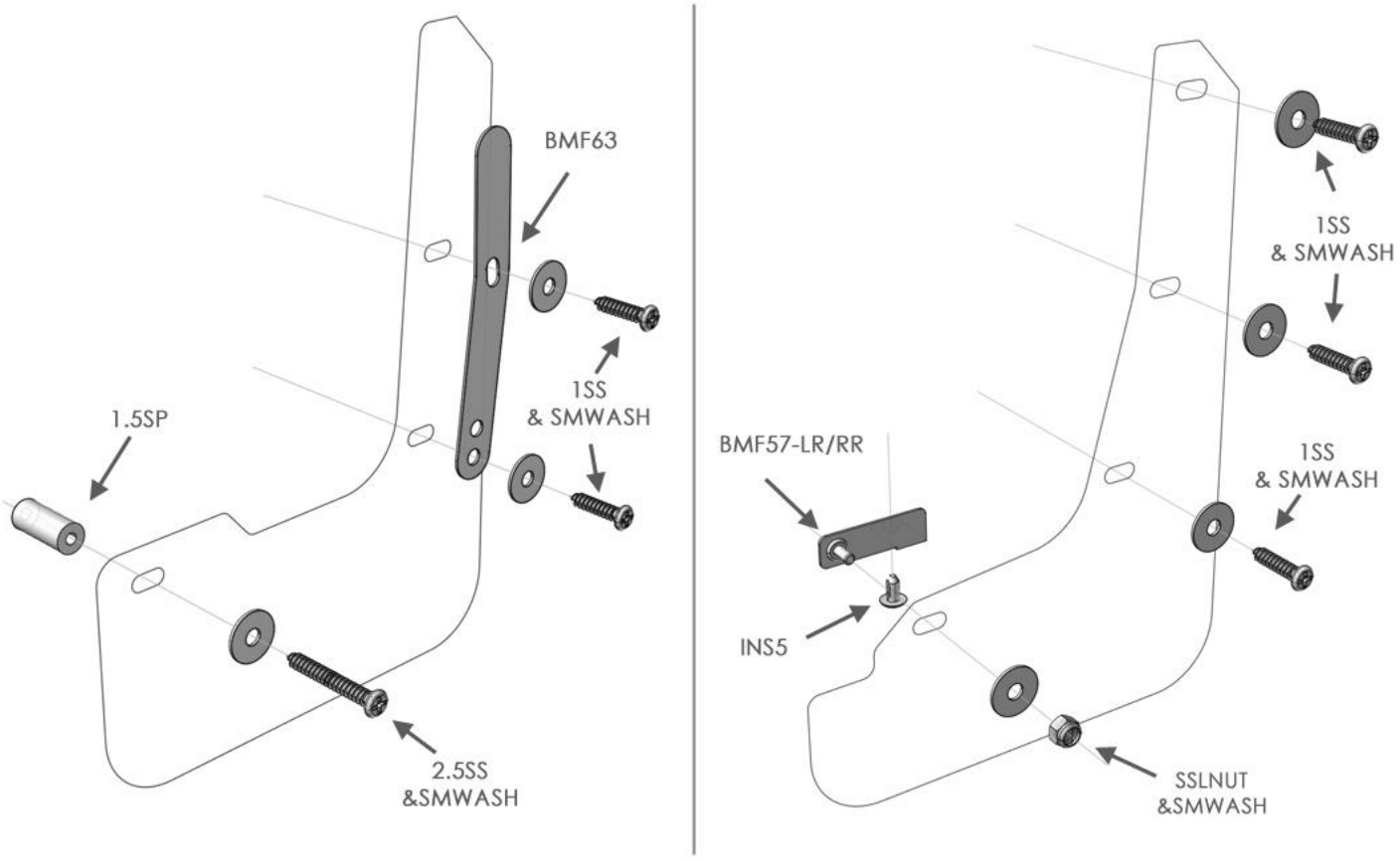

Content and images are copyright of Rally Armor® LLC