EDELBROCK E-FORCE SUPERCHARGER
10 RIB SUPERCHARGER PULLEYS

For use with Street Rod E-Force Superchargers

PLEASE study these instructions carefully before beginning this installation. Most installations can be accomplished with common tools and procedures. However, you should be familiar with and comfortable working on your vehicle. If you do not feel comfortable performing this installation, it's recommended to have the installation completed by a qualified mechanic. If you have any questions, please call our Technical Hotline at: **1-800-416-8628**, 7:00 am - 5:00 pm, Pacific Standard Time, Monday through Friday.

IMPORTANT NOTE: Proper installation is the responsibility of the installer. Improper installation will void your warranty and may result in poor performance and engine or vehicle damage.

10 RIB SUPERCHARGER PULLEY PART NUMBERS AND SIZES			
Polished P/N	**Pulley Size**	**Black P/N**	**Pulley Size**
15842	4.125"	15845	4.125"
15843	4.00"	15846	4.00"
15827	3.875"	15847	3.875"
15844	3.75"	15848	3.75"
15829	3.50"	15849	3.50"
15851	3.25"	15850	3.25"
15853	3.00"	15852	3.00"
15855	2.75"	15854	2.75"

WARNING: Please note that these pulleys are intended for use with Edelbrock Street Rod E-Force Supercharger systems **ONLY.** The 10 Rib design will not work with other Edelbrock E-Force supercharger systems.

VEHICLE TUNING: It is very important to retune your vehicle, after changing the pulley sizes, to achieve the best performance. It is not recommended to drive the vehicle in an aggressive manner before the vehicle has been retuned. Failure to do so may result in severe engine damage.

IMPORTANT WARNING: Edelbrock is not liable for any failures and/or damages associated with the use or installation of these 10 Rib supercharger pulleys.

INSTALLATION: Release the tension from the tensioner and remove the supercharger belt. Use a strap wrench to securely hold the pulley while breaking the four supercharger pulley bolts loose with a 5mm Hex Tool. Remove the factory pulley from the supercharger hub. Coat the threads of the factory pulley bolts with red loctite. Install the new supercharger pulley onto the hub and secure with the factory bolts using a star tightening sequence. Support the pulley with a strap wrench and torque all bolts to 8 ft-lbs. (96 in-lbs.), using the same star tightening sequence. Reinstall the appropriate supercharger belt (sold separately).

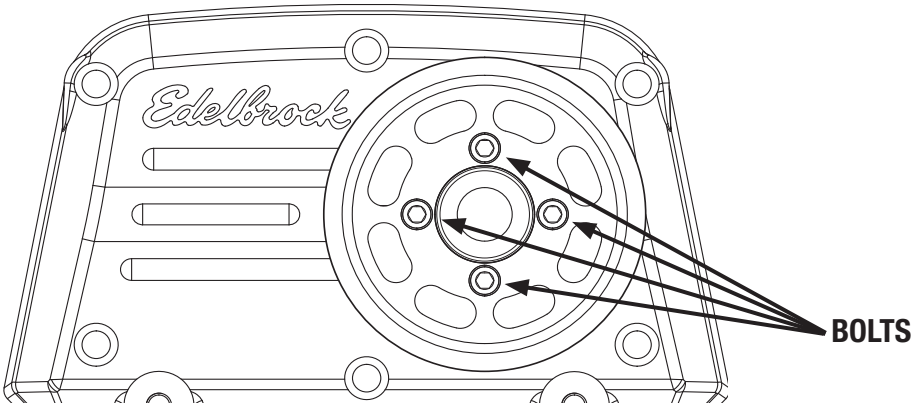

Edelbrock LLC • 2700 California Street • Torrance, CA 90503
Tech Line: 1-800-416-8628 • Sales/Office Line: 310-781-2222

©2014 Edelbrock LLC
Brochure #63-15842