Caliper Covers
Quick Installation Guide

MGP CALIPER COVERS

A

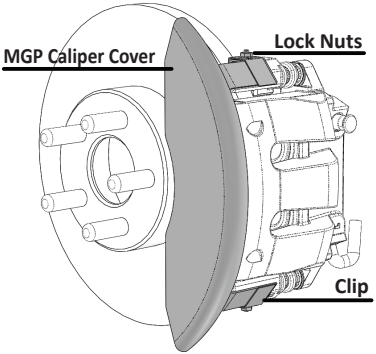

TOOLS REQUIRED

- 3/8 wrench
- .013 feeler gauge
  (or included .013 paper strip)

IMPORTANT

- Clip baggies marked FRONT & REAR. Keep separate.
- Space between wheel and face of caliper must be 1/8” min.

1 MGP Caliper Cover

Remove lock nuts from caliper cover.

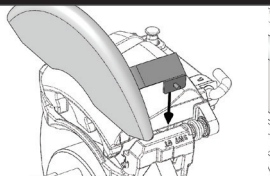

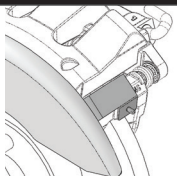

Place the caliper cover on the brake caliper. Cover should be centered across the front. Caliper cover bridges should be positioned against the brake caliper bracket.

2 Clips

Slide the stainless steel clips over the bridges and caliper brackets and around the threaded studs to fasten the cover. Fit should be snug and secure.

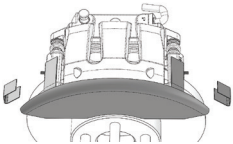

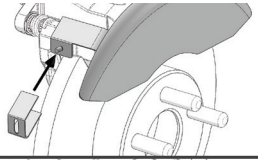

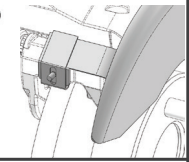

3 Lock Nuts

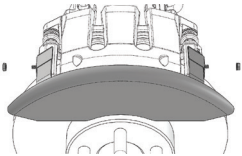

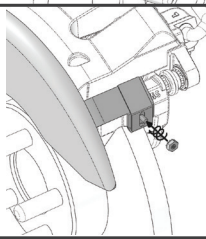

Install the supplied lock nuts onto the threaded studs to secure clip to bridge. Tighten with 3/8-inch wrench or socket to 25 in pounds. Do not overtighten nuts.

Troubleshooting Guide

MGP CALIPER COVERS

IMPORTANT!
Use feeler gauge or the included paper strip to check clearance between clip and brake rotor. A gap of at least .013 inch (.32 mm) is recommended (enough to slide the paper strip in and out without sticking).
Re-install wheel and use paper strip to check clearence on all sides of cover. Tighten lugnuts per manufacturer's specifcation.

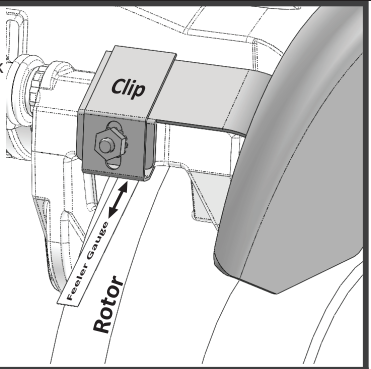

Caliper Cover should rest directly against the face of the brake caliper. The installer should verify that the bridges are set to 88°as depicted on image. Installer may adjust as needed.

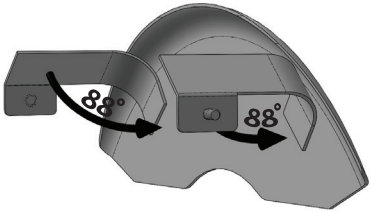

Need Help?

Email • TECH@CALIPERCOVERS.COM

Tech Support • 1.877.995.0003 - Option 2

Scan the QR code for the installation instructions video

QR Code Scanner Not Working?

No worries! Find us on YouTube:
Just Search
"MGP Tech CA Style Clip Install"