INSTALLATION INSTRUCTIONS

Bumper Winch Mount

Part Number: 101700

Application: HONDA PIONEER 1000

GENERAL SAFETY PRECAUTIONS

Your safety, and the safety of others, is very important. To help you make informed decisions about safety, we have provided installation and operating instructions and other information on labels and in this guide. This information alerts you to potential hazards that could hurt you or others. It is not possible to warn you about all potential hazards associated with this product, you must use your own good judgment.

CARELESS INSTALLATION AND OPERATION CAN RESULT IN SERIOUS INJURY OR EQUIPMENT DAMAGE. READ AND UNDERSTAND ALL SAFETY PRECAUTIONS AND OPERATING INSTRUCTIONS BEFORE INSTALLING AND OPERATING THIS PRODUCT.

This guide identifies potential hazards and has important safety messages that help you and others avoid personal injury or death. WARNING and CAUTION are signal words that identify the level of hazard. These signal words mean:

⚠WARNING signals a hazard that could cause serious injury or death, if you do not follow recommendations. ⚠CAUTION signals a hazard that may cause minor to moderate injury, if you do not follow recommendations.

This guide uses NOTICE to call attention to important mechanical information, and Note: to emphasize general information worthy of special attention.

⚠ WARNING

IMPACT AND MOVING PARTS ENTANGLEMENT HAZARD

Failure to observe these instructions could lead to severe injury or death

- **Always** take time to fully read the Instructions and/or Operations Guide, and/or Basic Guide to Winching Techniques, in order to understand your winch and its operations.
- **Always** use extreme caution when drilling on any vehicle. Make sure that all fuel lines, brake lines, electrical wires, and other objects are not punctured or damaged when/if drilling on the vehicle. Thoroughly inspect the area to be drilled (on both sides of material) prior to drilling, and relocate any objects that may be damaged. Failure to inspect the area to be drilled may result in vehicle damage, electrical shock, fire or personal injury.
- **Always** wear safety glasses when installing this kit. A drilling operation will cause flying metal chips. Flying chips can cause eye injury.
- **Always** use extreme caution when cutting and trimming during fitting.
- **Always** remove jewelry and wear eye protection.
- **Never** lean over battery while making connections.
- **Never** route electrical cables:
  - Across any sharp edges.
  - Through or near moving parts.
  - Near parts that become hot.
- **Always** insulate and protect all exposed wiring and electrical terminals.
- **Always** install terminal boots as directed in installation instructions.
- **Always** use appropriate and adequate care in lifting components into place.
- **Always** insure components will remain secure during installation and operation.
- **Always** tighten all nuts and bolts securely, per the installation instructions.
- **Always** perform regular inspections and maintenance on the plow mechanism, fasteners, cable and related hardware.
- **Always** replace all worn or damaged parts before operating.
- **Never** operate this WARN product with damaged or missing parts.

Read installation and operating instructions thoroughly.

WARN INDUSTRIES, INC. 12900 S.E. Capps Road,
Clackamas, OR USA 97015-8903, 1-503-722-1200, FAX: 1-503-722-3000
Customer Service: 1-800-543-9276
Dealer Locator Service: 1-800-910-1122
International Fax: 1-503-722-3005

©2018 Warn Industries, Inc. WARN® and the WARN logo are trademarks of Warn Industries Inc.

⚠ CAUTION

MOVING PARTS ENTANGLEMENT HAZARD

Failure to observe these instructions could lead to minor or moderate injury

- **Always** take time to fully read and understand the installation and Operations Guide included with this product.
- **Never** operate this product if you are under 16 years of age.
- **Never** operate this product when under the influence of drugs, alcohol or medications.

Read installation and operating instructions thoroughly.

NOTICE

EQUIPMENT DAMAGE

- **Never** tow vehicle by attaching a tow bar to the eyelets on the bumper.
- **Never** attach tow bars directly to the bumper. Damage to bumper may occur. WARN bumpers are not designed to be used for flat towing. Consult with the manufacturer of your tow bar system for the proper vehicle tow bar brackets.
- Never overtighten u-bolt nuts. Overtightening may cause damage to vehicle frame.

Read installation and operating instructions thoroughly.

TABLE OF CONTENTS

Tools Required.....page 2
Torque Specifications.....page 3
Parts List.....page 3
Installation .....page 4-5
Maintenance/Care.....page 5

TOOLS REQUIRED

- Metric wrenches
- Metric sockets

©2018 Warn Industries, Inc. WARN® and the WARN logo are trademarks of Warn Industries Inc.

PARTS LIST

ID No.	Item No.	Description	Qty.
A1	102071	BUMPER	1
A2	102077	LOWER SUPPORT BRACKET	1

ID No.	Item No.	Description	Qty.
B1	66129	M8 SERRATED FLANGE NUT	5
B2	93104	M8 HEX BOLT	9
B3	1324	FLAT WASHER	4
B4	22491	M8 NYLOCK NUT	4
B5	86814	M8 U-BOLT	2

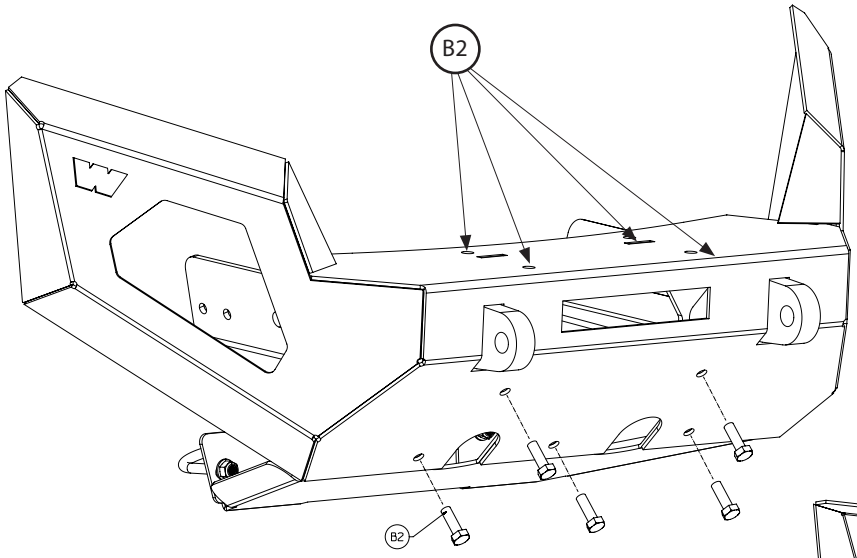

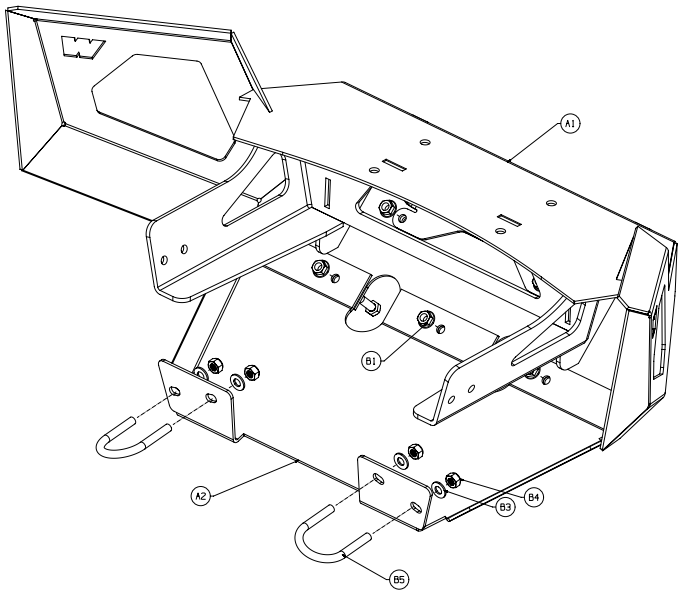

TORQUE SPECIFICATIONS

Please use the recommended torque specifications when assembling this product unless otherwise specified in the instructions.

FASTENER SIZE	*FASTENER TORQUE*		*FASTENER SIZE*	*FASTENER TORQUE*	
	lb-ft	*(N.m)*		*lb-ft*	*(N.m)*
1/4"	*8*	*(11)*	*M4*	*(2)*	*3*
5/16"	*17*	*(23)*	*M5*	*(4.5)*	*6*
3/8"	*30*	*(40)*	*M6*	*(7.5)*	*10*
7/16"	*48*	*(66)*	*M8*	*(18)*	*25*
1/2"	*74*	*(100)*	*M10*	*(37)*	*50*
9/16"	*106*	*(144)*			
5/8"	*148*	*(200)*			
3/4"	*269*	*(364)*			

NOTICE: Torque does not apply to u-bolts.

©2018 Warn Industries, Inc. WARN® and the WARN logo are trademarks of Warn Industries Inc.

INSTALLATION INSTRUCTIONS

1. Remove front bumper by removing the two bottom bolts and four bolts from the bumper tubes (4).

   Remove bumper from vehicle frame tubes by pulling evenly towards you.

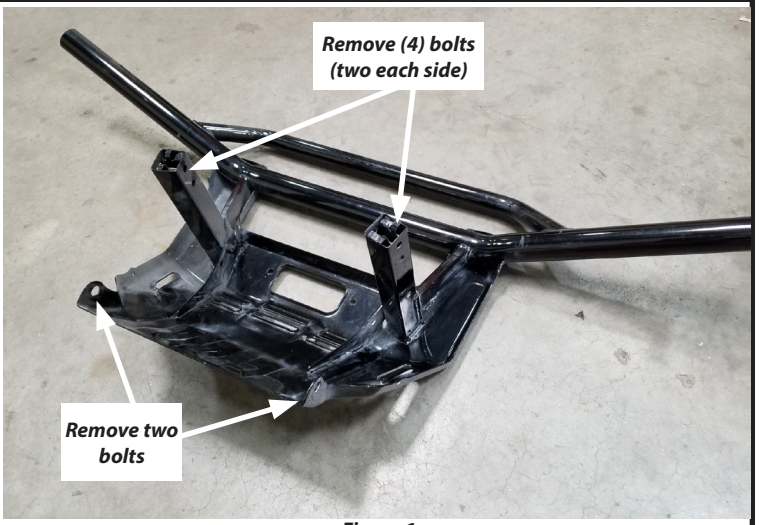

Figure 1

2. Install the lower support bracket (A2) to the vertical front frame tubes, using u-bolts (B5), washers (B3) and lock nuts (B4). Do not fully tighten as to allow for futher adjustment.

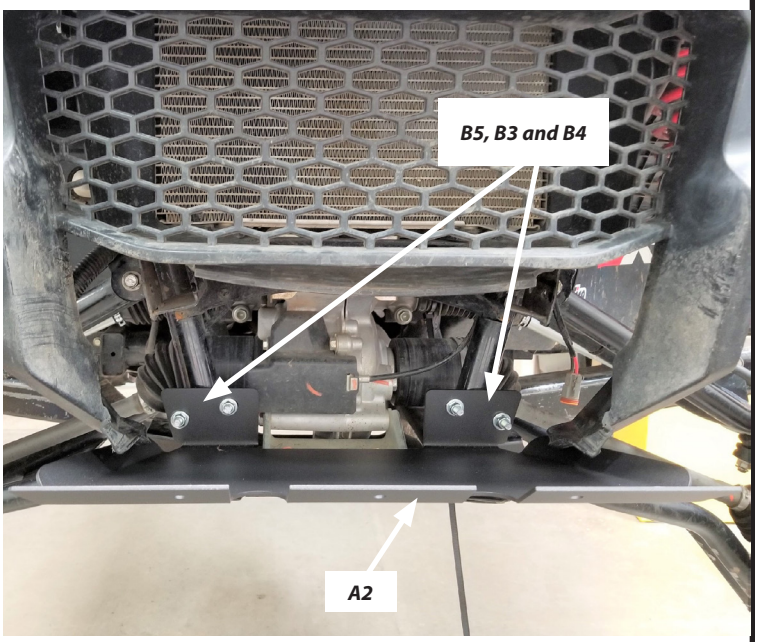

Figure 2

3. ***TIP: If installing a light bar, install the light bracket before installing the bumper.***

   Lift bumper (A1) up to the factory bumper mounting holes and install the four bottom bumper factory bolts you removed earlier and install back into position.

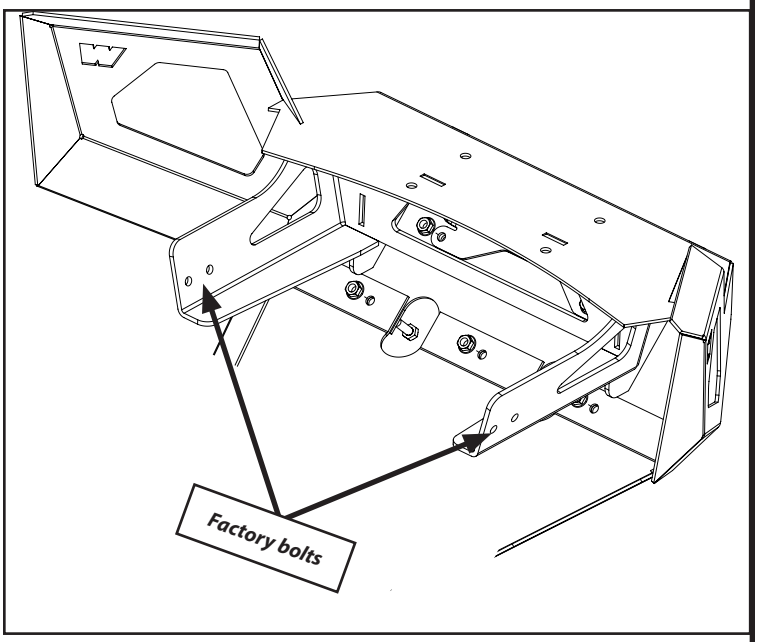

Figure 3

©2018 Warn Industries, Inc. WARN® and the WARN logo are trademarks of Warn Industries Inc.

INSTALLATION INSTRUCTIONS

4. Make sure when you are installing the bumper, you are overlapping the skid plate. It should lay to the inside of the bumper.

   Secure the skid plate at this time to the lower lip of the bumper using the M8 bolts and flange nuts supplied.

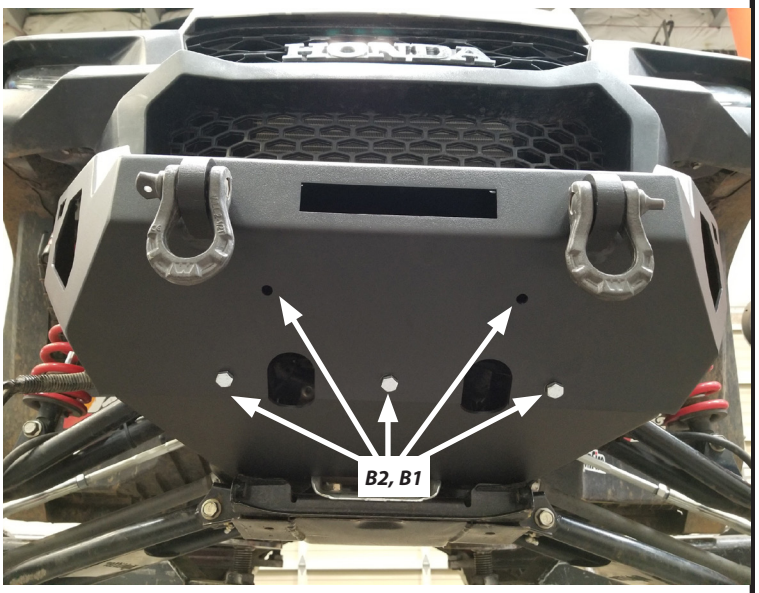

Figure 4

5. Mount winch using four of the M8 bolts (B2) included in this kit.

   Complete winch wiring using your winch installation instructions.

   NOTE: You will use the fairlead mounting plate in this kit when mounting fairlead.



Figure 5

6. Tighten u-bolts nuts securely, but careful to not overtighten.
   NOTICE: Never overtighten u-bolt hardware.
   Overtightening may cause damage to vehicle frame.

7. Tighten the rest of the hardware at this time. Refer to specifications on page 3.

MAINTENANCE / CARE

1. Inspect all parts on the winch, winch mount, and related hardware prior to each use. Replace all hardware that appears rusted or deformed.

2. Inspect all nuts and bolts on the winch, winch mount and related hardware prior to each use. Tighten all nuts that appear to be loose. Stripped, fractured, or bent bolts or nuts need to be replaced.

3. Check all cables prior to use. Replace cables that look worn or frayed.

4. Check all moving or rotating parts. Remove debris that may inhibit the part from moving freely.

©2023 Warn Industries, Inc. WARN® and the WARN logo are trademarks of Warn Industries Inc.